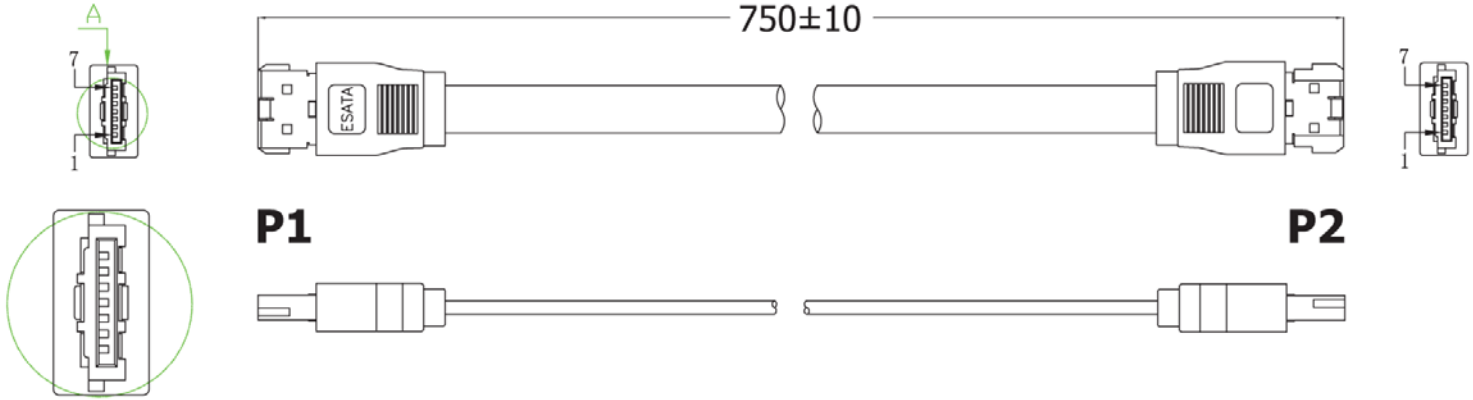

Section A-A
Scale 2:1

Pin Assignment

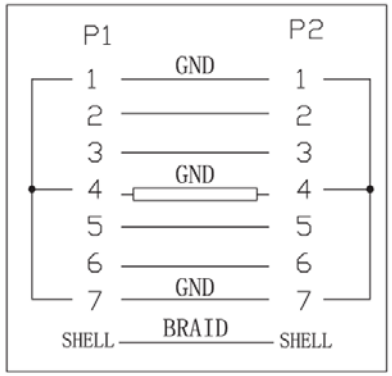

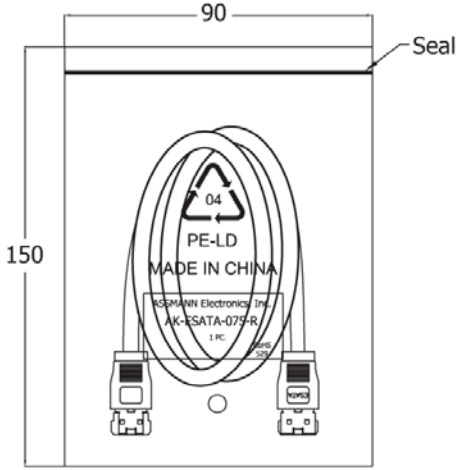

Material:

- Cable: UL2725 [26AWG(1/0.404)*2F INS:HD-PE+D/W(1/0.32)*2C+AL/MY]*2F
  - Inner Jacket PVC
  - OD 2.1*7.3MM +Braid(16/10/0.1)+PVC Jacket Color: Black OD 4.0*9.0MM
  - L730+5/-0MM
- Connectors: eSATA 7P/F Crimp Type
  - Pin G/F
  - Insulator Black
- Tube: Heat shrink tube Black OD 12MM L 10MM
- Acetate: Acetate cloth tape W 10MM * L 40MM
- Copper Foil: Double-Sided conductive copper foil W 10MM*L 30MM
- Outer Jacket: PVC 45P Color Black

Electrical:

- 100% Open Short & Miswire test
- Conductive resistance: 1Ω Max.
- Insulation Resistance: 10MΩ/Min.
- Hi-Pat Test 300V DC

Unit: MM

RoHS Complaint

Scale	1:1						Name	Item No. AK-ESATA-075
TOLERANCE					Drawn	12.29.11	Chappell	
X.X	±0.40				Approved			Title External SATA (eSATA) Cable - 7P/F <=> 7P/F, 7.5M
X.XX	±0.25							
X.XXX	±0.15							Drawing No. rev00
Angle	±3°							
			Modification	Date	Name			Replace Sheet

ASSMANN WSW components