Alle Rechte vorbehalten/ *All rights reserved*

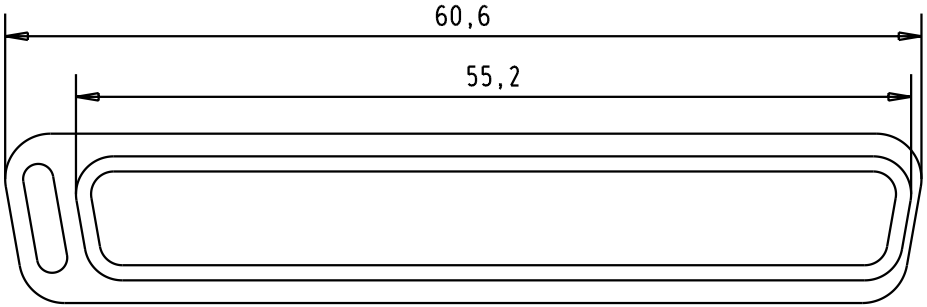

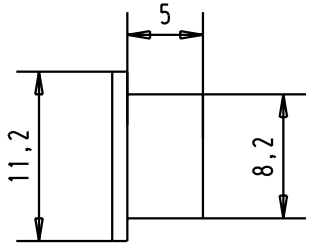

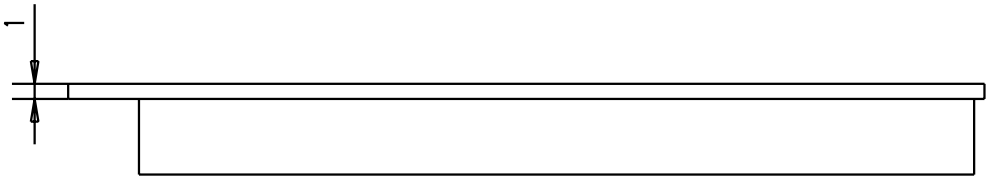

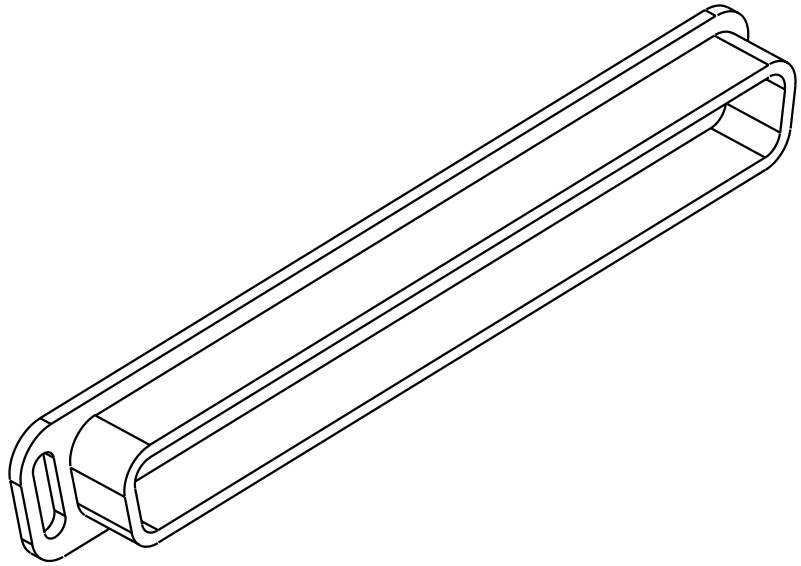

							Dat.	Name			Maßstab/ *Scale*
						Detail.	09-APR-02	CV	All Dim. in mm Orig. Size DIN A 4	D-Sub, Dust cap, thermoplastic black, for male connector 37 poles	2:1
						Insp.					
						Stand.					
09 67 037 0611						HARTING EURL F-95972 Paris				TB 09670370611	Blatt/ *Page* 1
			29768	09-APR-02	CV						
Part number			Mod.	Dat.	Name					Sub.	