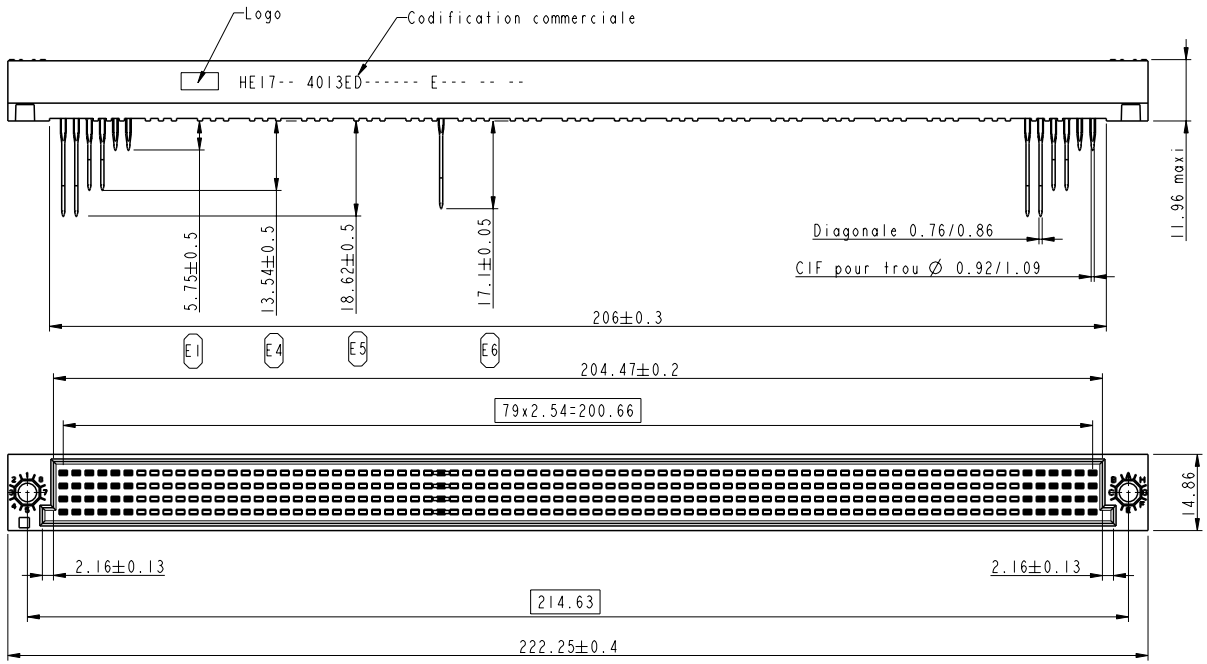

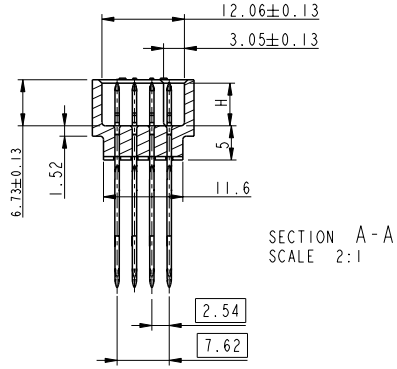

General Data
-In accordance with NFC/UTE 93401 and DIN 41612
-Ends:-Pressfit for 0.92/1.09mm holes in PCB with thickness2.4-3.2mm
-Pressfit for 0.92/1.09mm holes in PCB with thickness 2.4-3.2mm + wrapping connection + rear mating
-Special breaking contact implantation refer drawing VJW12315 (Consult us)
-Sliding and indexing polarized system

Technical Data:
Electrical

1. Initial contact resistance	≤ 20mΩ
2. Insulation resistance after test	≥ 5000MΩ
3. Withstanding voltage: measured between 1 contact and all others	≥ 900 Vrms
4. Operating Voltage:	≥ 100Vac
5. Operating current:	≥ 1.5A at 20°C

Mechanical

1. Insertion force (each contact)	≤ 0.6N
2.Withdrawal force (each contact)	≥ 0.6N
3.Endurance Class 1	≥ 500 Cycles
Class 2	≥ 400 Cycles
4.Pressfit insertion force (each contact)	≤ 250N
5.Pressfit withdrawal force (each contact)	≥ 30N

Materials
Body: Fibreglass reinforced thermoplastic UL94 V0
Contacts: Phospher bronze
Plating: Gold over Nickel on working area

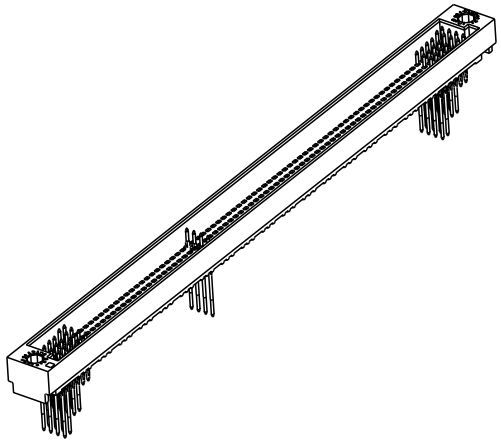

Nb de contacts / *Nr of contacts*	Equipment Arrangement	Cote 'H' (mm) / *'H' Dimension (mm)*	Protection zone contact / *Plating of contact area*		Protection zone raccordement / *Plating of end area*		Code du connecteur / *Connectors number*
320	1 2 3 4 a b c d	H = 4.58 $^{+0.3}_{-0}$	1 Norme HE 1702	DIN Class 2	2(LF) Doré sur Nickel / Gold over Nickel		4013ED320A01E1.4 / 4013ED320A01E1.4LF
		H = 5.18 $^{+0.3}_{-0}$	2 Norme HE 1703 (Au 0.76 µ)	DIN Class 1	3(LF) Etamé sur nickel / Tin-lead over Nickel; Etame sur Nickel / Tin-lead over Nickel		
240	1 2 3 4 a b c d + + + +	H = 6.18 $^{+0.2}_{-0}$	3 Norme HE 1703 (Au 1.27 µ)	DIN Class 1	4(LF) Nickelé (Standard) / Nickel (Standard plating)		4013ED240B01E1.4 / 4013ED240B01E1.4LF
					6(LF) Identique zone contact (Zone wrapping nickelée) / Same than contact area (Ni on wrapping area)		
Autres equipements Nous consulter / *Other arrngements Consult us*			Remplacer:par code protection / *Replace : by plating code*		Autres protections Nous consulter / *Other plating consult us*		

Codification commerciale.Modèles standard/ Catalogue numbers for ordering.Standard items : see drawing VJW12314
NOTA: For implantation specifique see drawing : Outoff standard 4 rows VJW12315
Outoff standard 3 rows VJW53937

NOTE:RoHS INFORMATIONS
The "LF" product meets European union Directives and other country regulations as described in GS-22-008.
-The product is not intented to be exposed to a manufacturing solder process.
-Packaging spec: see GS-14-920.

IND	DESIGNATION	PCN N°	DATE
E	OBSOLETE PART NUMBER: 4013ED320A8AE124 / 4013ED320A8AE124LF	06019	2006/04/30
F	ADD NOTA : IMPLANTATION SPECIFIC		
G	ADD SHEET 3 for P/N 4013ED320A8AE5--		

ltr	ecn no	dr	date
H	LS08-0018	HLG	2008/01/21
-	-	-	-
C	LS05-0063	MRA	2005/07/07
D	LS05-0117	LGO	2006/01/10
E	LS06-0123	PCR	2006/08/08
F	LS06-0216	HLE	2006/12/14
G	LS06-0224	DVE	2006/12/19

EUROPEAN PROJECTION

www.fciconnect.com	surface - ISO 1302	tolerance std ISO 406 ISO 1101	projection	mm	
	TOLERANCES UNLESS OTHERWISE SPECIFIED				
Dr D LEGRAND 2003/01/02	ANGULAR	LINEAR 0.X ±0.3	size A2	Scale 1:1	
Eng F TISSERAND 2003/01/02		0.XX ±0.1			
Chr JF NOTTEAU 2003/01/02	0° ±2°	0.XXX ±0.05	ECN LS08-0018		
Appr F.TI 2003/01/02	Product family	DIN	Spec ref -		
title ASSYHE17 4x80		dwg no VJW54441	Rev. H		
4013ED320A8CE-26 VXX27733					
catalog no -		CUSTOMER	sheet 1 of 3		

Copyright FCI.

REV F - 2006-04-17

PDM: Rev:H STATUS:Released Printed: Oct 01, 2010

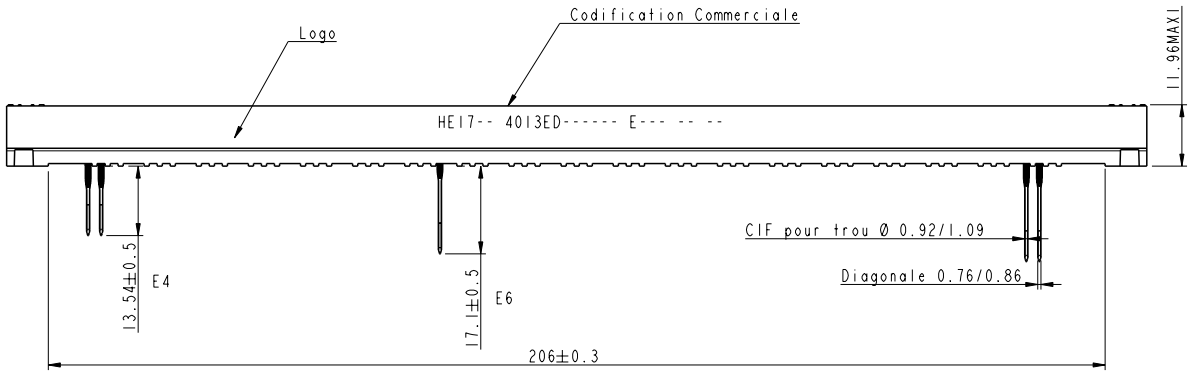

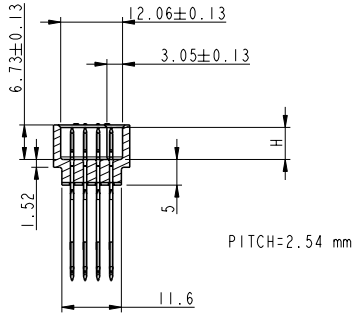

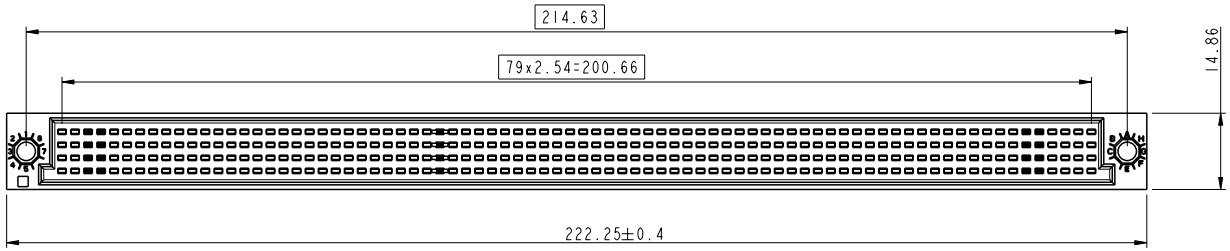

General Data
-In accordance with NFC/UTE 93401 and DIN 41612
-Ends:-Pressfit for 0.92/1.09mm holes in PCB with thickness2.4-3.2mm
-Pressfit for 0.92/1.09mm holes in PCB with thickness 2.4-3.2mm + wrapping connection + rear mating
-Special breaking contact implantation refer drawing VJW12315 (Consult us)
-Sliding and indexing polarized system

Technical Data:
Electrical

1. Initial contact resistance	⩽ 20mΩ
2. Insulation resistance after test	⩾ 5000MΩ
3. Withstanding voltage: measured between 1 contact and all others	⩽ 900 Vrms
4. Operating Voltage:	⩾ 100Vac
5. Operating current:	⩾ 1.5A at 20°C

Mechanical

1. Insertion force (each contact)	⩽ 0.6N
2.Withdrawal force (each contact)	⩾ 0.6N
3.Endurance Class 1	⩾ 500 Cycles
Class 2	⩾ 400 Cycles
4.Pressfit insertion force (each contact)	⩽ 250N
5.Pressfit withdrawal force (each contact)	⩾ 30N

Materials
Body: Fibreglass reinforced thermoplastic UL94 V0
Contacts: Phospher bronze
Plating: Gold over Nickel on working area

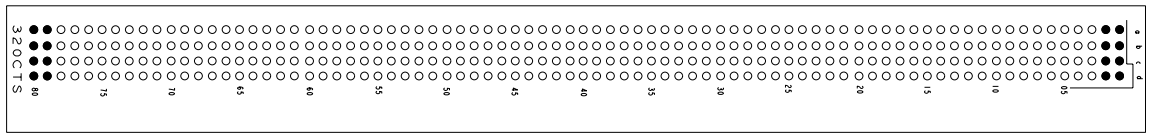

● Cavity a01,b01,c01,d01
a02,b02,c02,d02
a79,b79,c79,d79
a80,b80,c80,d80
loaded with stitted contact of 0.95 (H=6.28±0.1)

○Cavity loaded with contact (H=5.33±0.15)

0.76µm Au OVER 2µmNi	0.76µm Au OVER 2µmNi
CONTACT AREA	END AREA
PLATING EXPLANATION	

IND	DESIGNATION	PCN N°	DATE
	OBSOLETE PART NUMBER: 4013ED320A8CE426 4013ED320A8CE626	04061	2005/02/24

EUROPEAN PROJECTION

www.fciconnect.com

surface - ISO 1302 ✓ | tolerance std ISO 406 ISO 1101 | projection | mm

TOLERANCES UNLESS OTHERWISE SPECIFIED

Dr	D LEGRAND	2003/01/02	ANGULAR	LINEAR	0.X	±0.3	size A2 / Scale 1:1
Eng	F TISSERAND	2003/01/02			0.XX	±0.1	
Chr	JF NOTTEAU	2003/01/02	0° ±2°		0.XXX	±0.05	ECN LS08-0018
Appr	F.TI	2003/01/02	Product family			DIN	Spec ref -

title ASSYHE17 4x80
4013ED320A8CE-26 VXX27733
dwg no VJW54441
Rev. H
catalog no -
CUSTOMER
sheet 2 of 3

Copyright FCI.

REV F - 2006-06-17

PDM: Rev:H STATUS:Released Printed: Oct 01, 2010

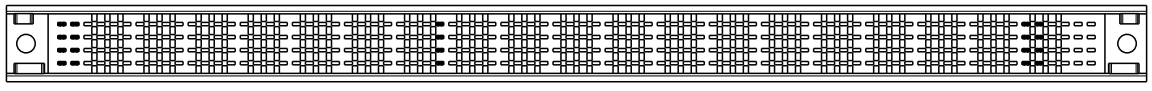

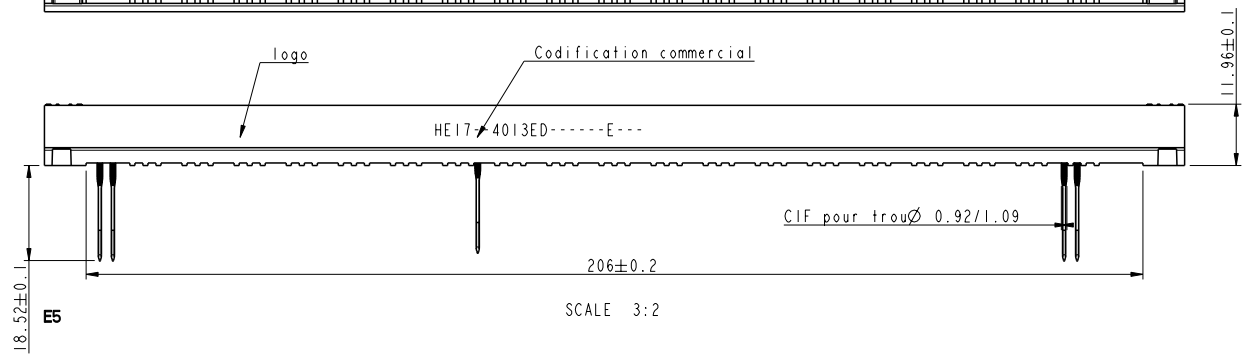

SCALE 3:2

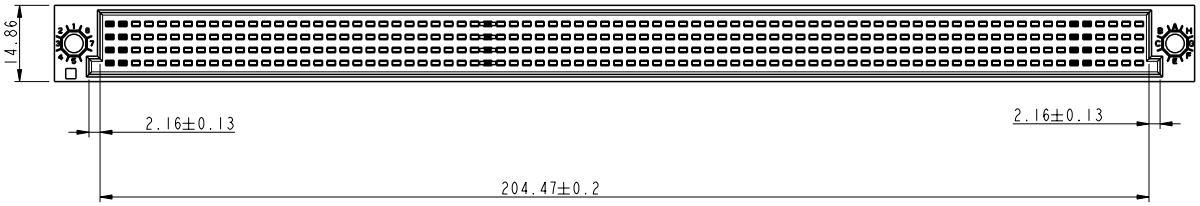

IMPLANTATION SPECIFIQUE
TOP VIEW (MATING SIDE)

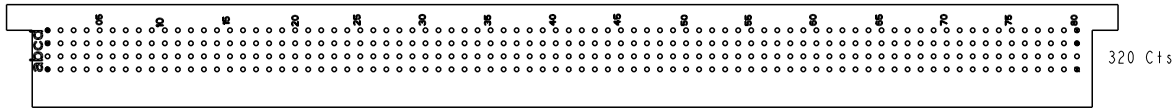

● Cavity a01/d01/a80/d80 loaded with stitted contact of 0.95 (H=6.28±0.1)
⊗ Cavity c01/c80 loaded with flattened contact of 0.6 (L=4.73±0.15)
○ Cavity loaded with contact (H=5.33±0.15)

SCALE 3:2

SECTION A-A

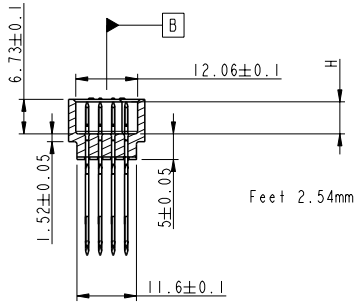

General Data
-In accordance with NFC/UTE 93401 and DIN 41612
-Ends:-Pressfit for 0.92/1.09mm holes in PCB with thickness2.4-3.2mm
-Pressfit for 0.92/1.09mm holes in PCB with thickness 2.4-3.2mm + wrapping connection + rear mating
-Special breaking contact implantation refer drawing VJW12315 (Consult us)
-Sliding and indexing polarized system

Technical Data:
Electrical

1. Initial contact resistance	20mΩ
2. Insulation resistance after test	5000MΩ
3. Withstanding voltage: measured between 1 contact and all others	900 Vrms
4. Operating Voltage:	100Vac
5. Operating current:	1.5A at 20°C

Mechanical

1. Insertion force (each contact)	0.6N
2.Withdrawal force (each contact)	0.6N
3.Endurance Class 1	500 Cycles
Class 2	400 Cycles
4.Pressfit insertion force (each contact)	250N
5.Pressfit withdrawal force (each contact)	30N

Materials
Body: Fibreglass reinforced thermoplastic UL94 V0
Contacts: Phospher bronze
Plating: Gold over Nickel on working area

DESIGNATION
P/N: 4013ED320A8AE516LF

www.fciconnect.com			surface - ISO 1302		tolerance std ISO 406 ISO 1101		projection	mm	
			TOLERANCES UNLESS OTHERWISE SPECIFIED						
Dr	D LEGRAND	2003/01/02	ANGULAR	LINEAR	0.X	±0.3	size	Scale	
Eng	F TISSERAND	2003/01/02			0.XX	±0.1	A2	1:1	
Chr	JF NOTTEAU	2003/01/02	0° ±2°		0.XXX	±0.05	ECN	LS08-0018	
Appr	F.TI	2003/01/02	Product family			DIN	Spec ref	-	
title	ASSYHE17 4x80				dwg no	VJW 54441		Rev. H	
catalog no	4013ED320A8AE---LF				CUSTOMER		sheet 3 of 3		

Copyright FCI.

REV F - 2006-06-17

PDM: Rev:H STATUS:Released Printed: Oct 01, 2010